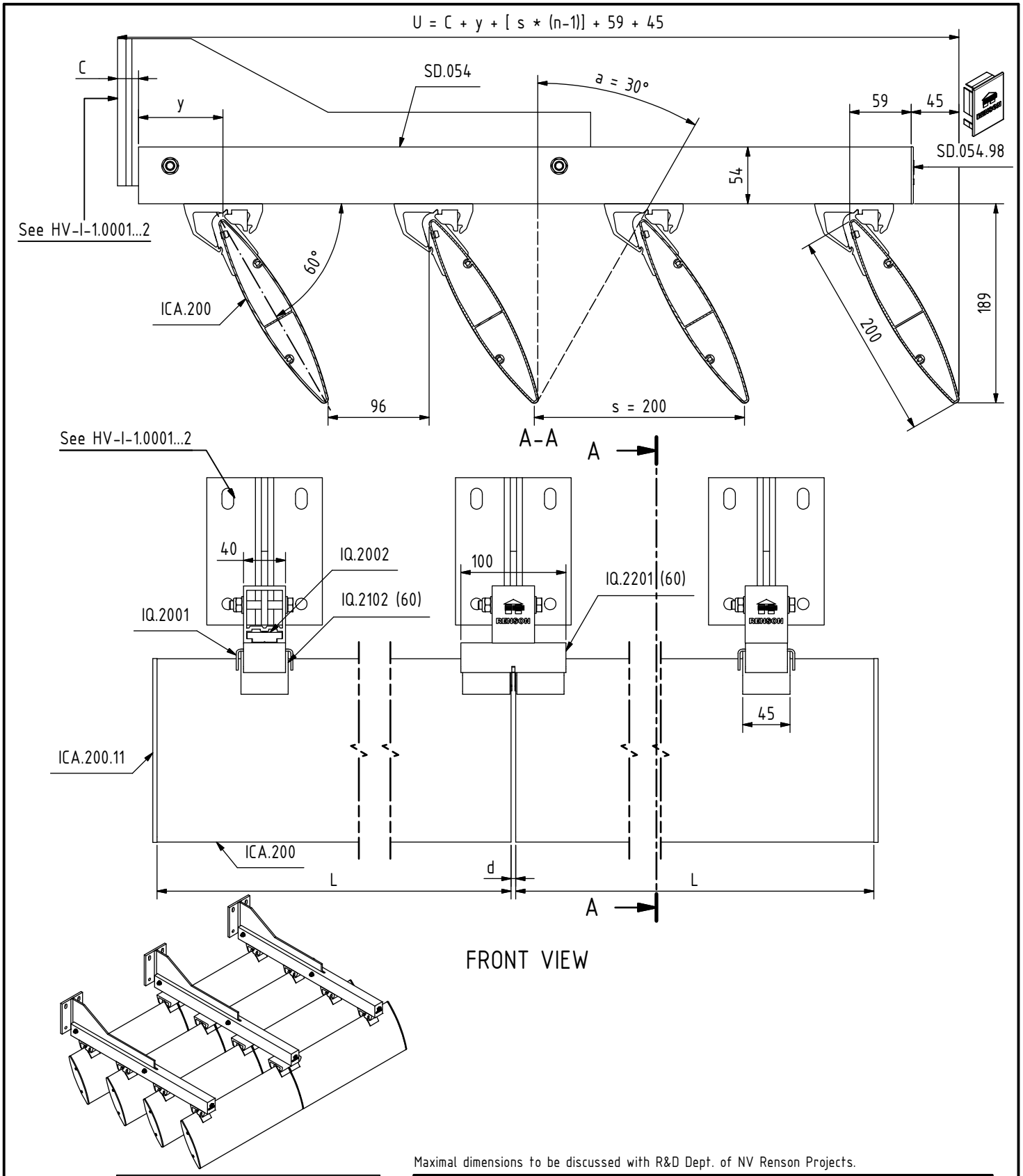


Maximal dimensions to be discussed with R&D Dept. of NV Renson Projects.

## KEY REFERENCE

| | |
|---|---|
| L: | Length of blade [mm] |
| d: | Expansion joint [mm] = 0,001 x L |
| s: | Step of blade [mm] |
| a: | Min. sun entrance angle [°] |
| U: | Projection [mm] |
| y: | ≥ 80 mm |
| n: | Number of blades |
| C: | Projection knife [mm] |

RENSON® Creating healthy spaces
RENSON FABRICATIONS Ltd
Fairfax Units 1-2-3
Bircholt Rd. - Parkwood I.E.
Maidstone, Kent, ME15 9SF
Tel.: 01622 754123
Fax: 01622 689478
www.renson.eu

HORIZONTAL FIXED

TYPE: ICARUS SUBTYPE: QUICKFIX

DESCRIPTION: ICA.200 (45°) + SD.054 ON BLADE

| PRODUCT SHEET | SHEET N° | ISSUE | Scale: 1/5 |
|---|---|---|---|
| | HV-I-1.0325 | V.02 | Orig. format: A4 |

R:\CAD\91. ProductFiches\INV\HV\IN\HV_I_1_0325-RF.dw

All rights reserved to NV RENSON PROJECTS. This drawing shall not be copied nor showed to third parties without written permission of NV RENSON PROJECTS.